方成电子（东莞）有限公司

FC-ULCT1013-Series-35A.Current Sense Transformers

Height: 21.0mm Max
Current Rating: up to 35A
Low Primary DCR version
Isolation: AC3750Vrms UL
Ambient temperature –40° C to +85° C
Storage temperature Component: –40° C to +125° C

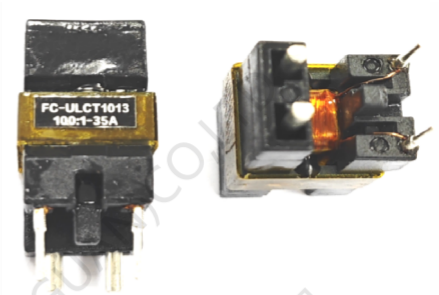

1. Dimensions:mm

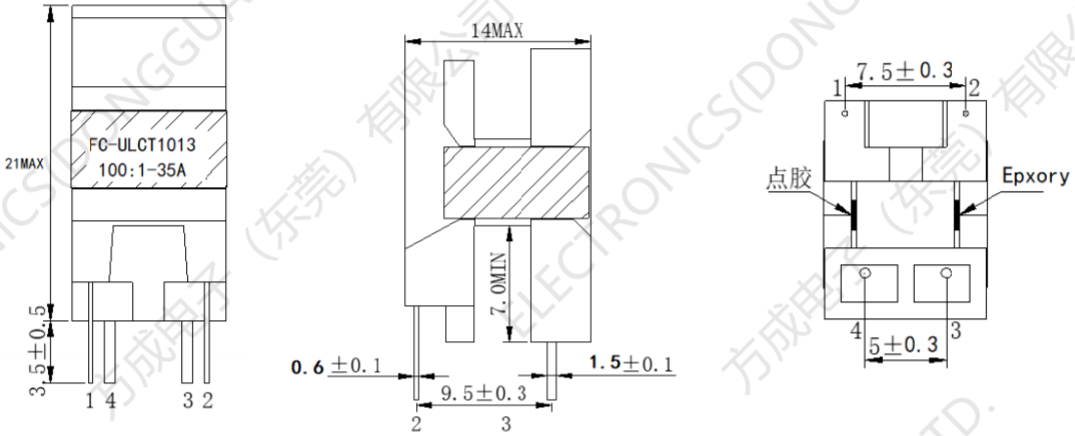

2.Schematic:

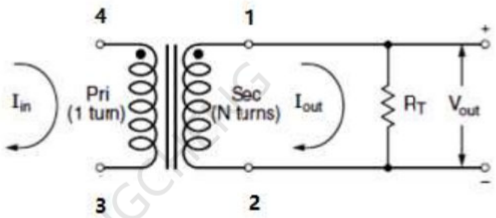

3.PCB,LAYOUT RECOMMENDATION

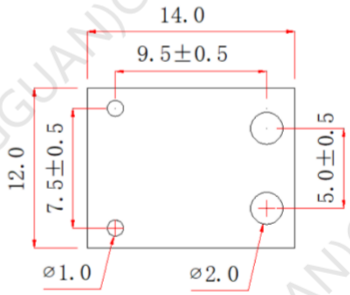

4.Electrical Characteristics：

Part Number	Turns Ration	Current Rating NP4-3,(A)	Secondary Inductance (PIN1-2-mH min)	DCR (mΩ MAX)		Hipot (ACVRMS)
				Primary (4-3)	Secondary (1-2)	Np-Ns
FC-ULCT1013-1:100-35A	1:100	35	5.0	0.8	3000	3750V
FC-ULCT1013-1:150-35A	1:150	35	5.0	0.8	5500	3750V
FC-ULCT1013-1:200-35A	1:200	35	20.0	0.8	6000	3750V

This specification applies to the DIP type UL high frequency current transformer **Current Sense Transformers**

Inductance: test frequency1KHZ/0.25V.

FangchengElectronics(Dongguan)Co.,LTD **TEL：0769-82988010 FAX：0769-82988065**
E-mail:yhl@fangchengcoils.com **http://www.fangchengcoils.com**